Gateway Enterprise

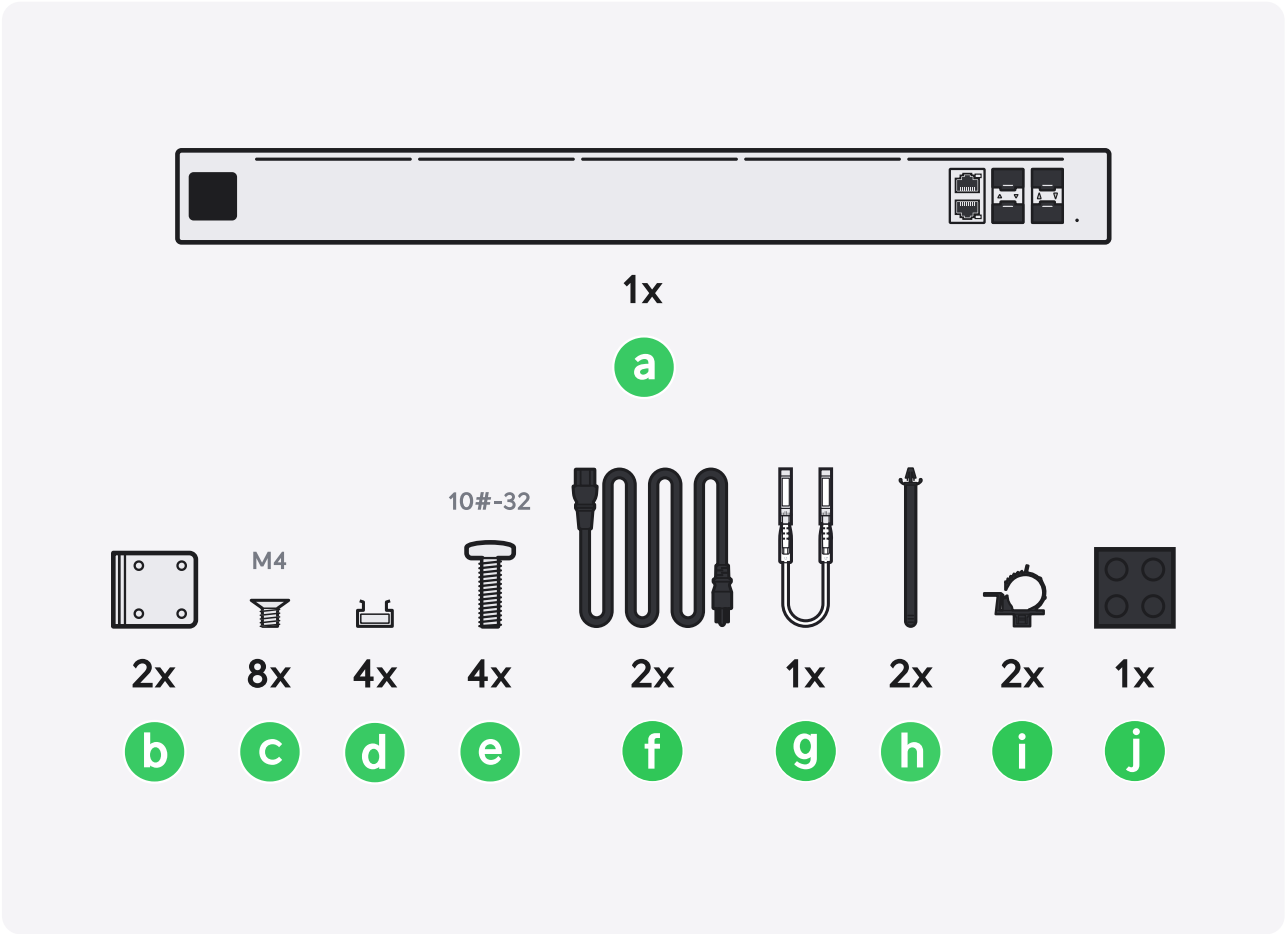
1x
a
M4
10#-32
2x
8x
4x
4x
2x
1x
2x
2x
1x
b
c
d
e
f
g
h
i
j

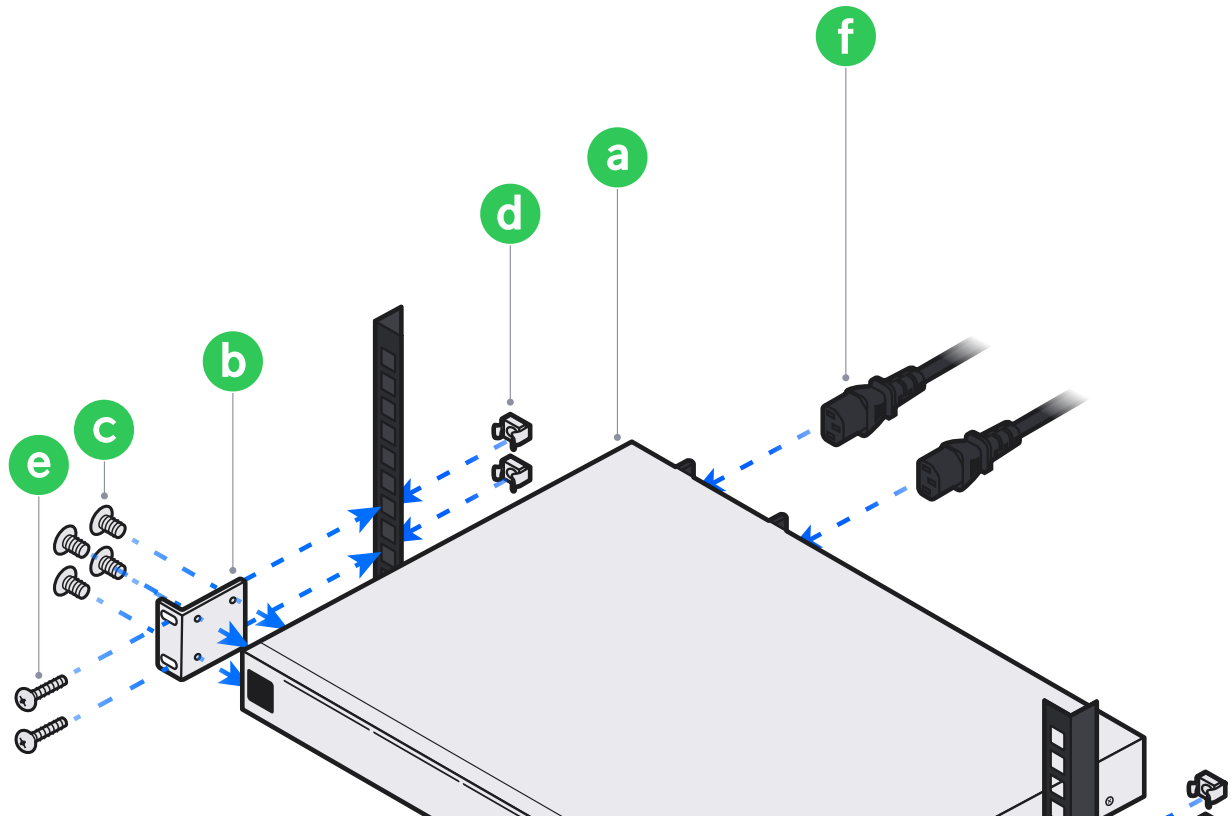
f
a
d
b
c
e

©2024 Ubiquiti Inc. All rights reserved. Ubiquiti, the Ubiquiti U logo, and UniFi are trademarks or registered trademarks of Ubiquiti Inc. in the United States and in other countries.
Apple and the Apple logo are trademarks of Apple Inc., registered in the U.S. and other countries. App Store is a service mark of Apple Inc., registered in the U.S. and other countries.
Android, Google, Google Play, and the Google Play logo are trademarks of Google LLC.

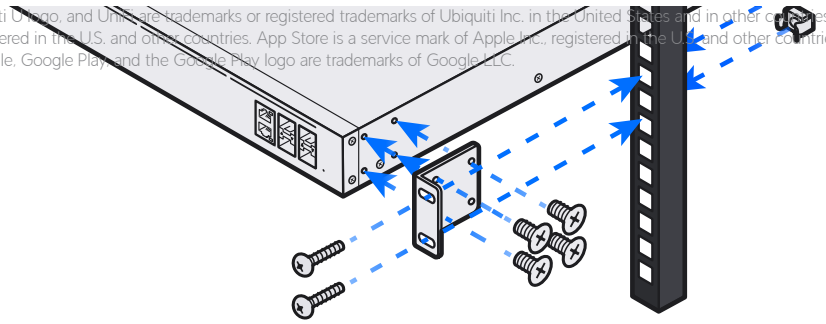

1

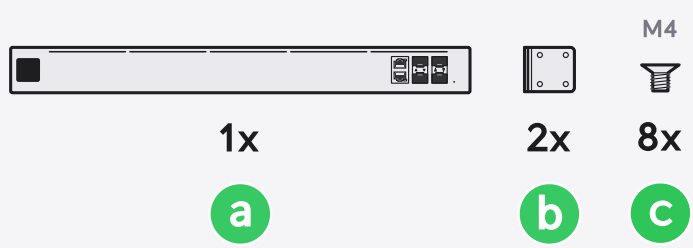

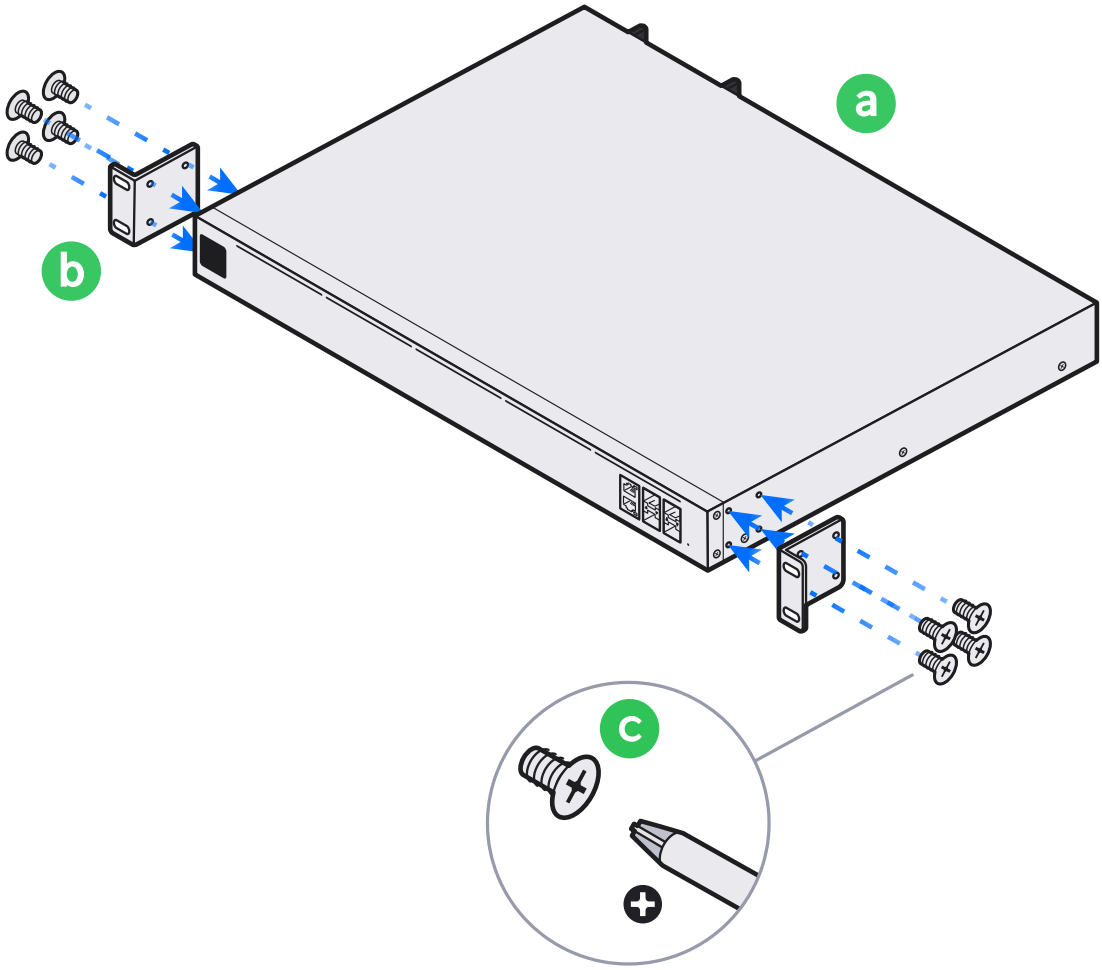

2

4x

d

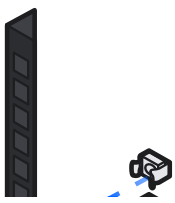

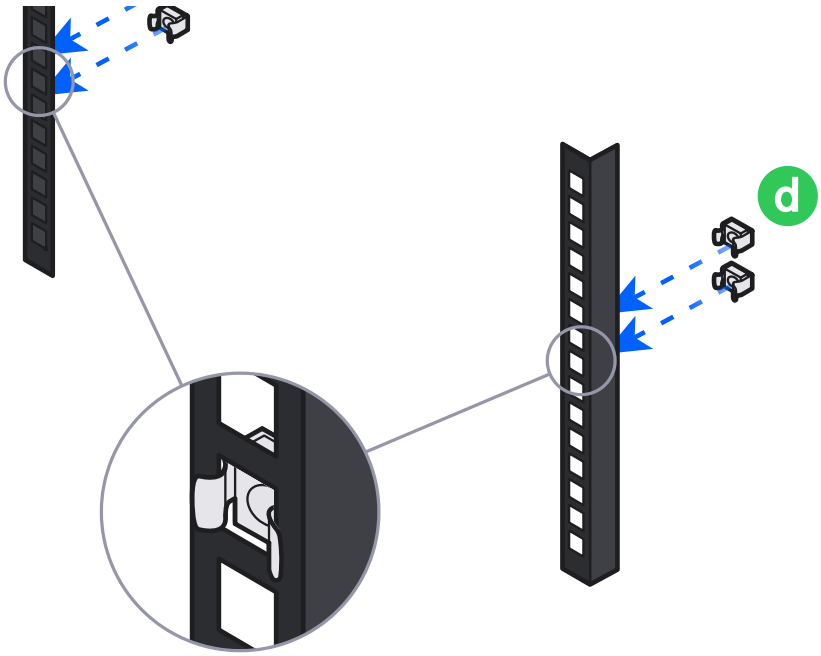

3

10#-32

4x

e

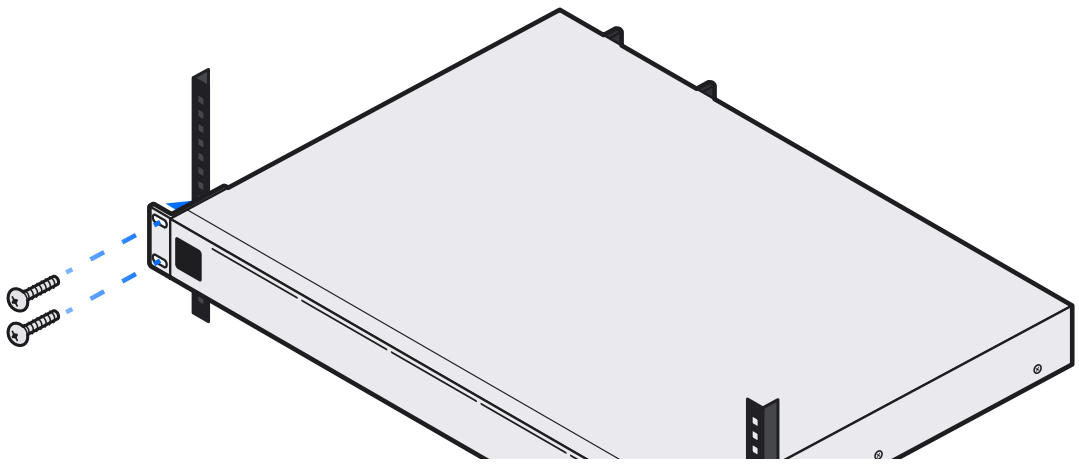

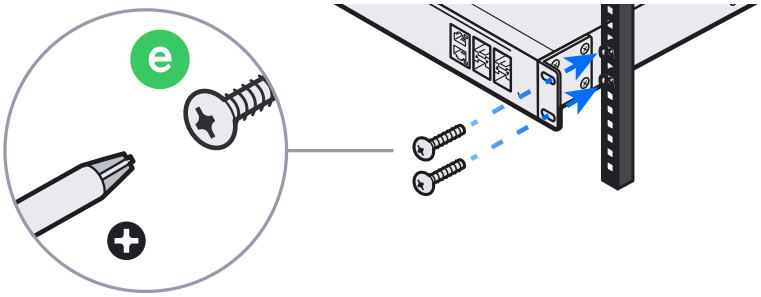

4

2x

f

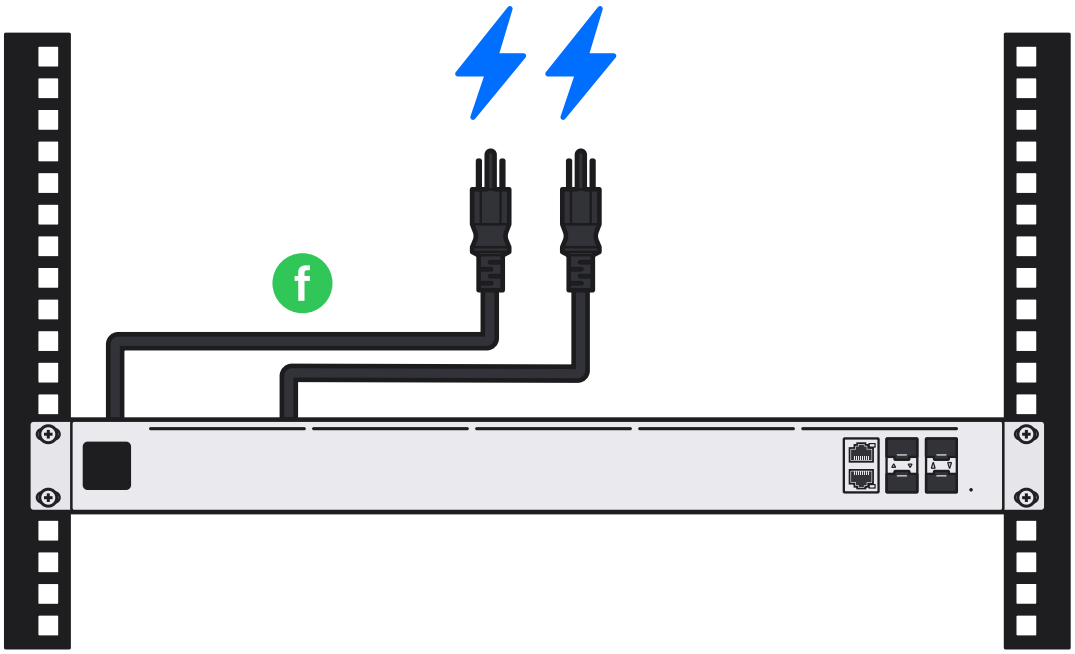

5

A

25G

Official
UniFi Hosting

B

25G

Internet

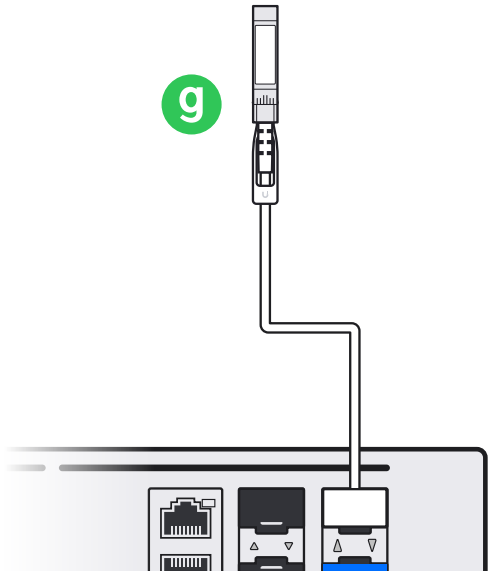

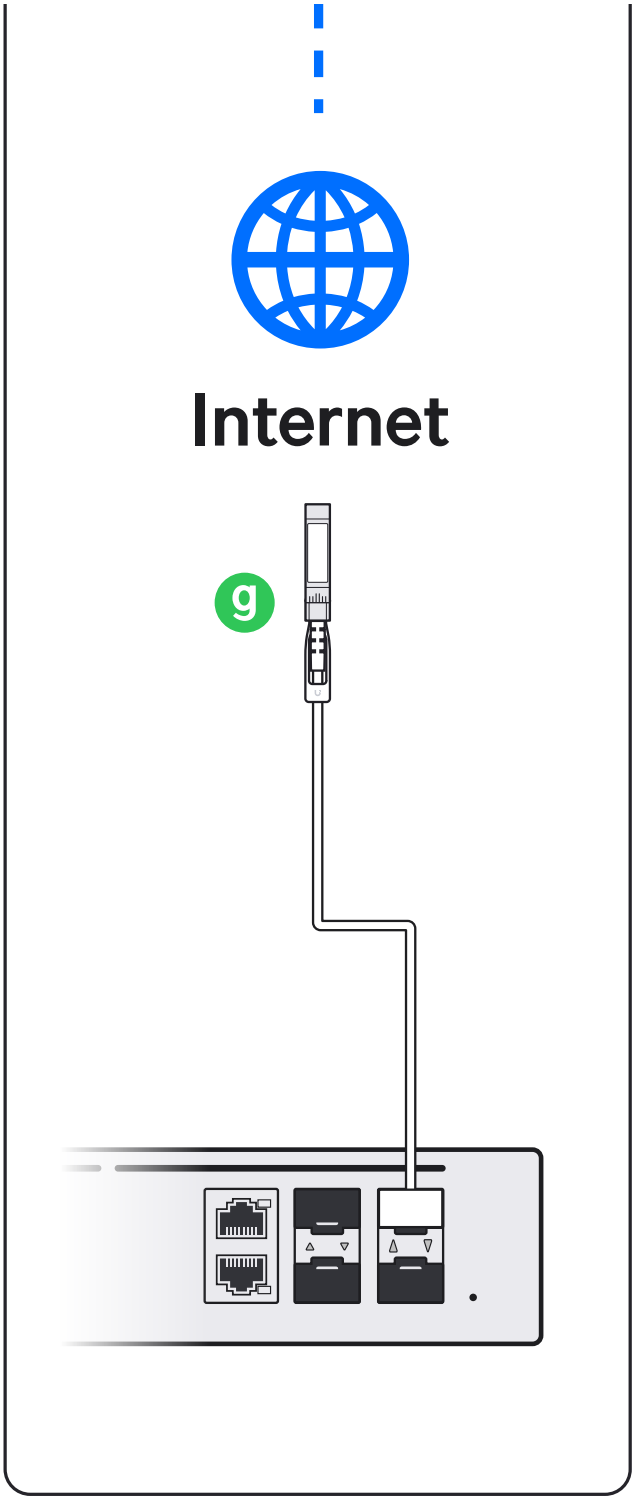

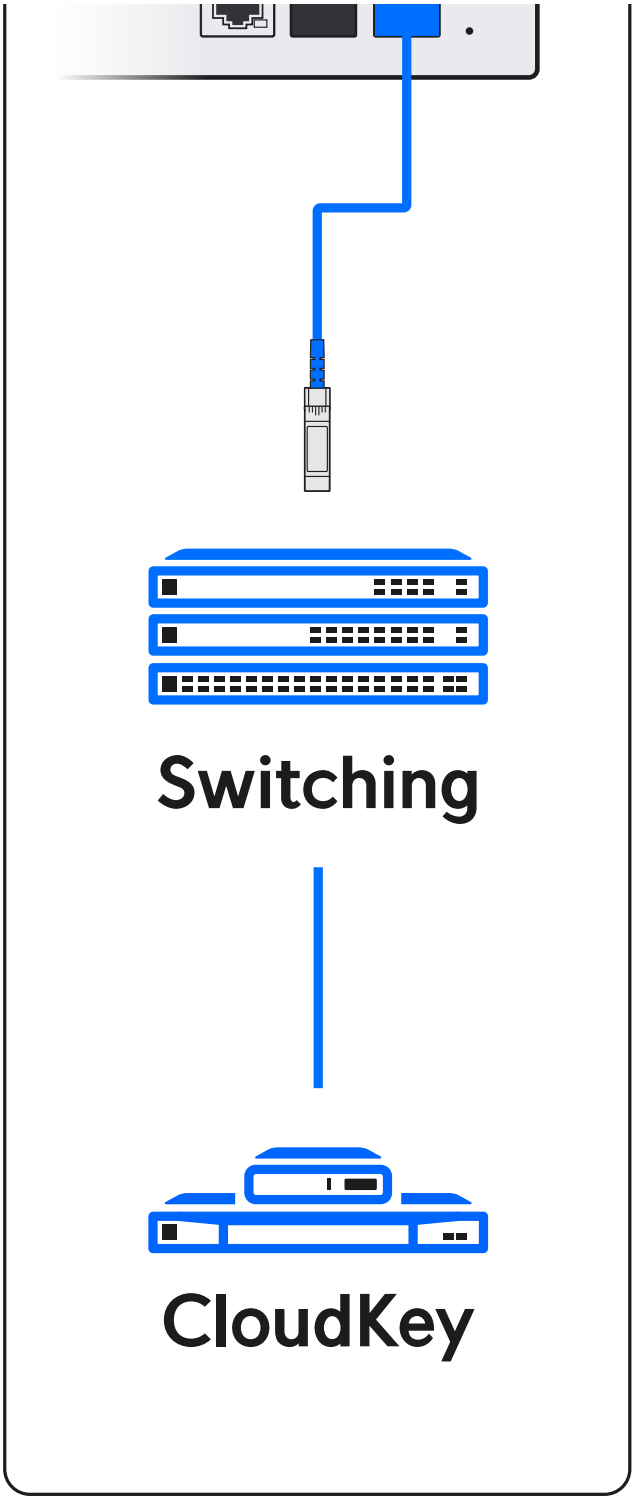

C

D

2.5G

Official UniFi Hosting

Internet

2.5G

Internet

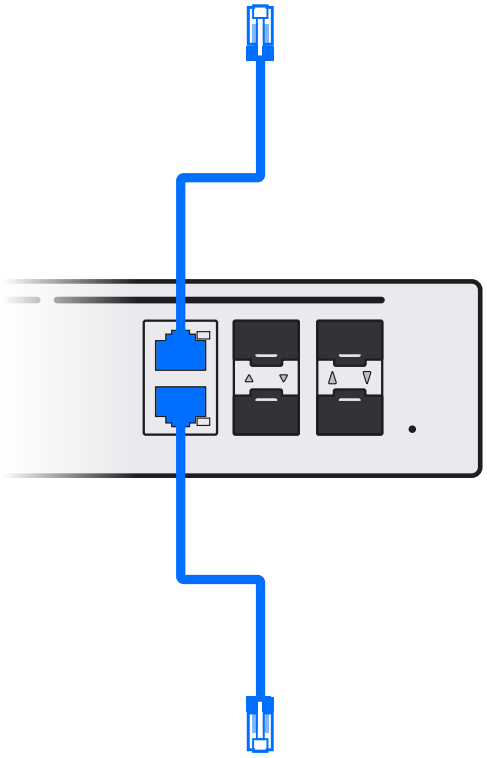

Switching

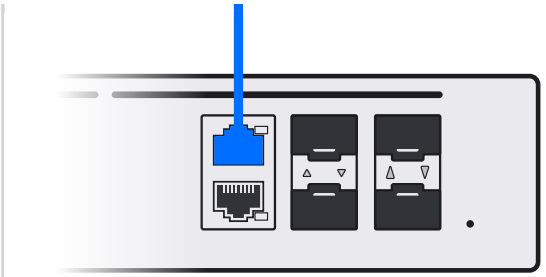

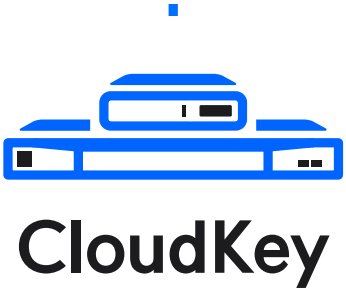
CloudKey

6

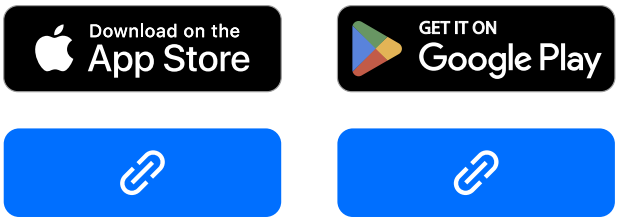
Download on the
App Store
GET IT ON
Google Play

UniFi

7

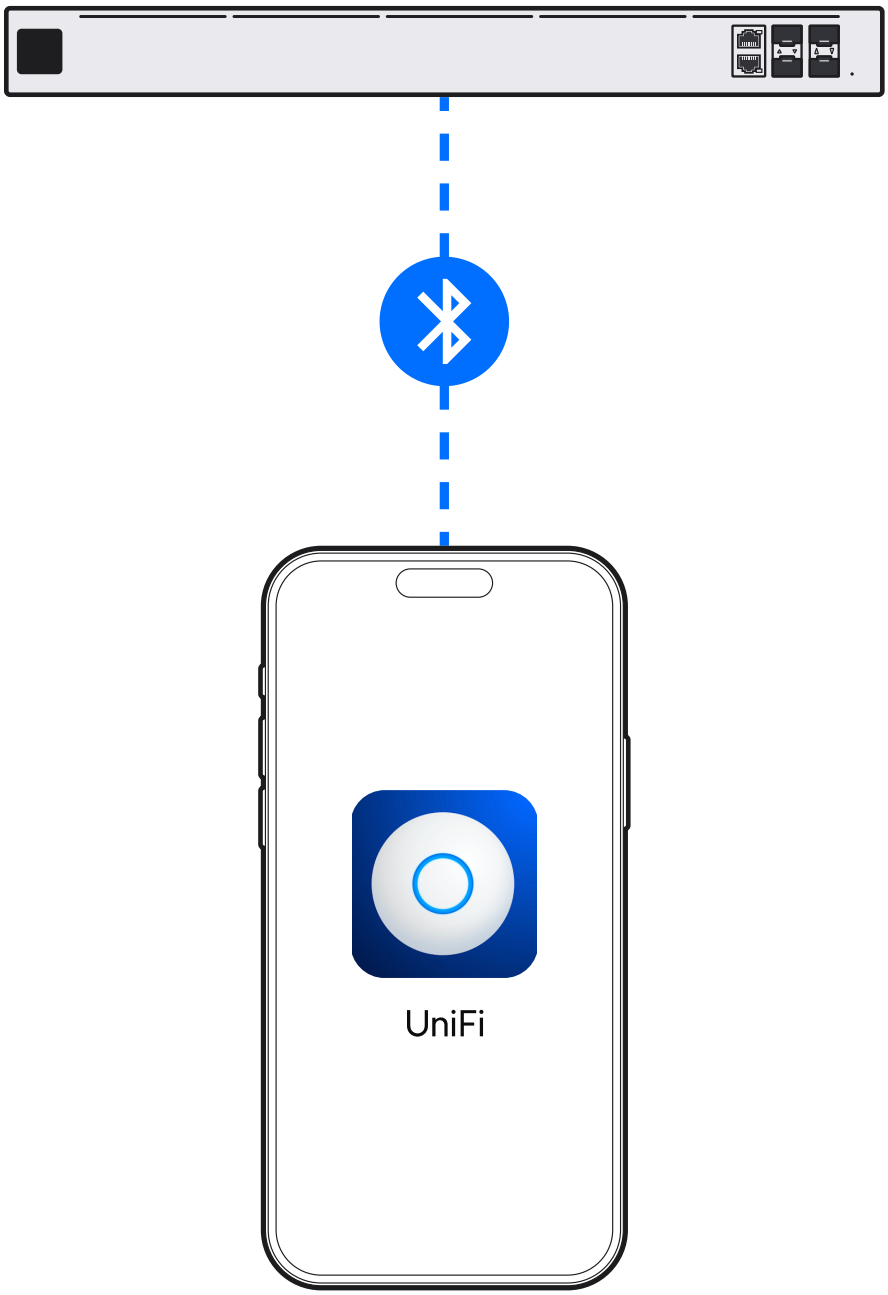

1

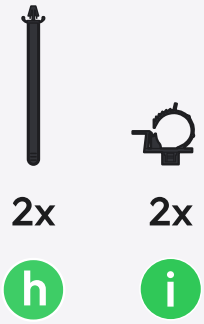

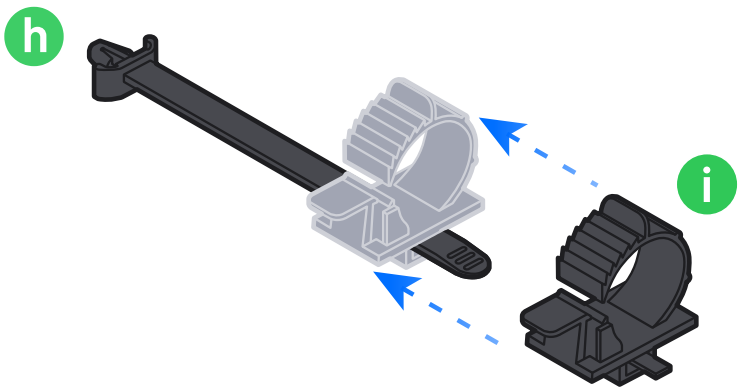

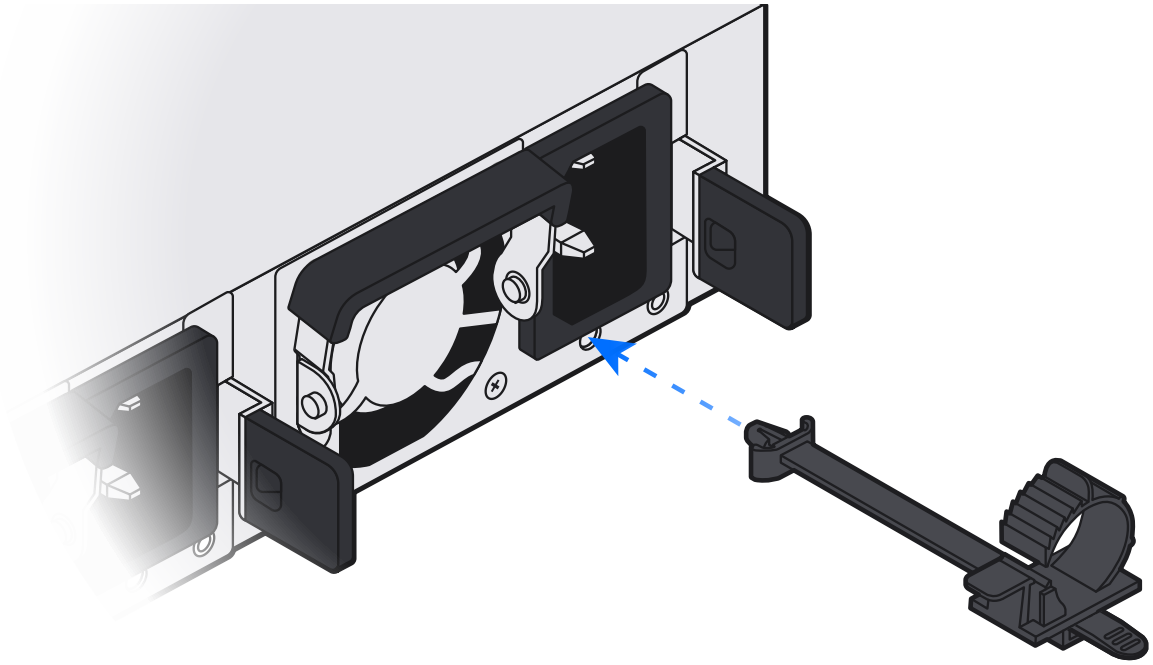

2

2x

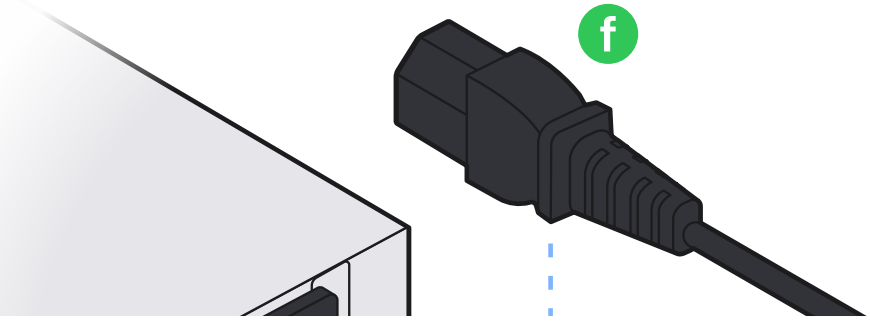

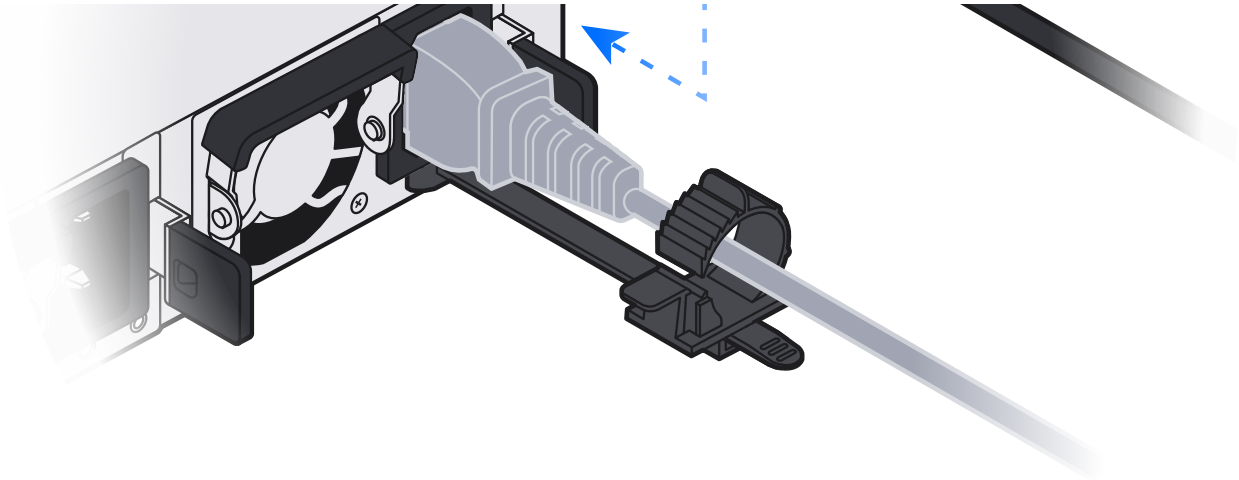

3

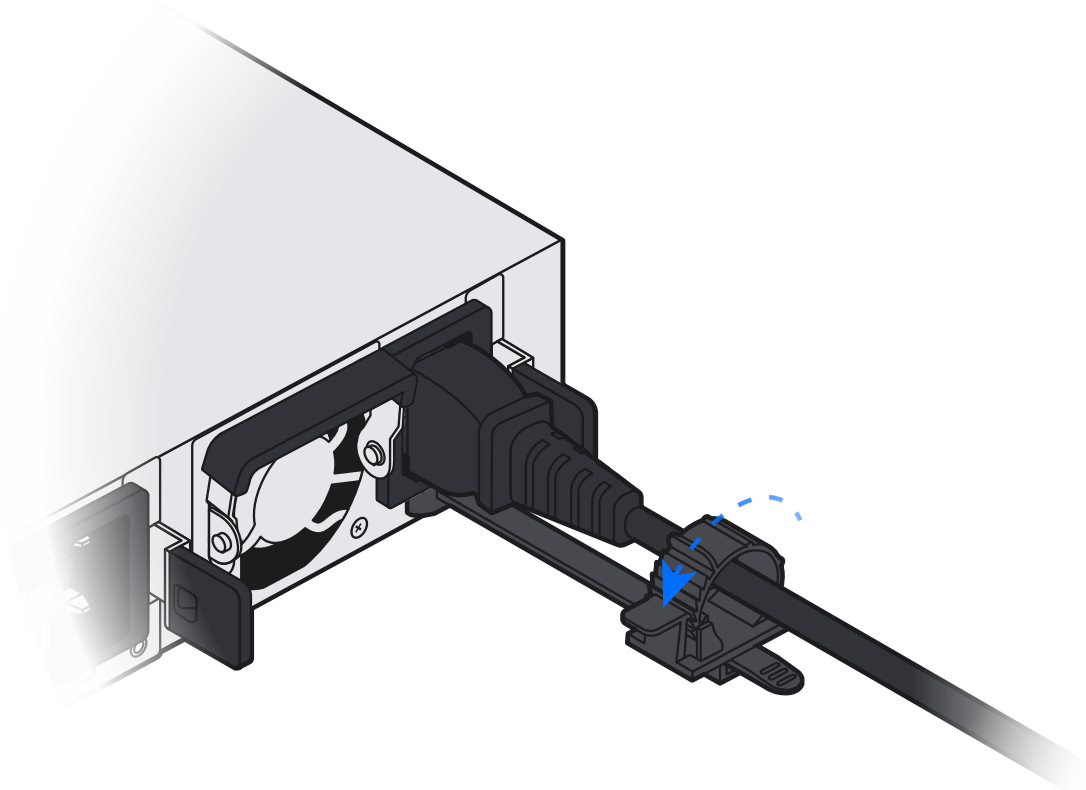

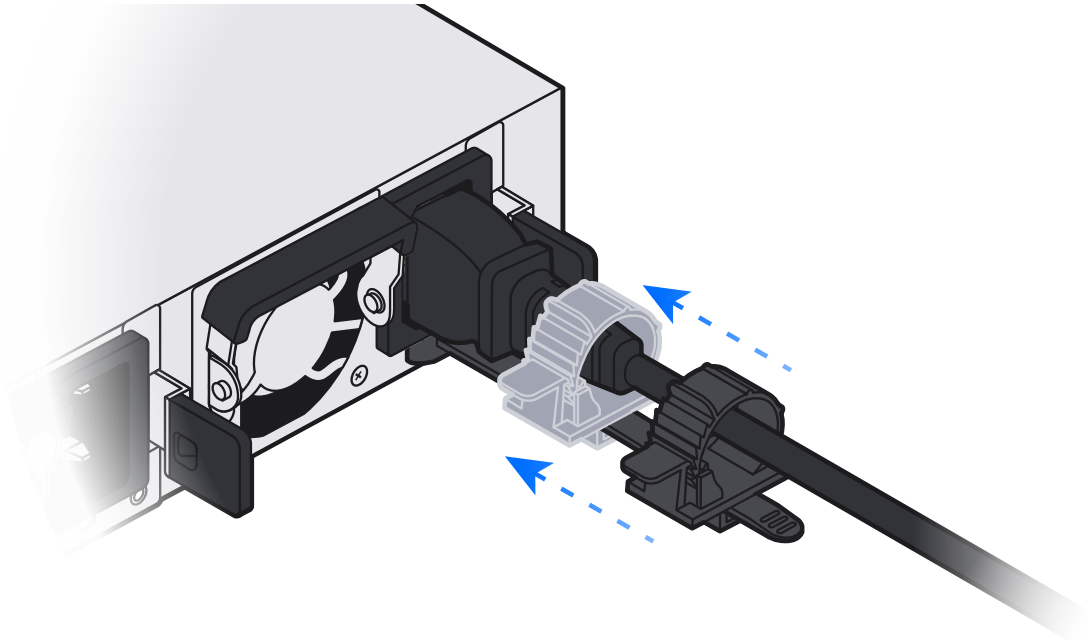

1

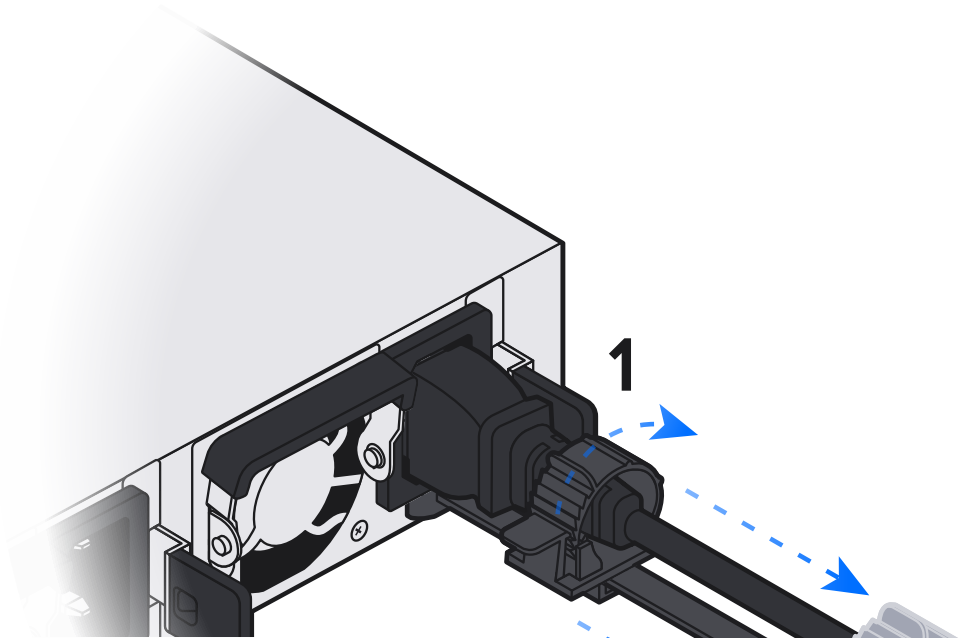

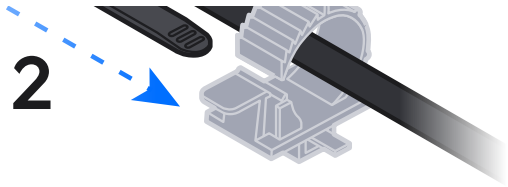

2

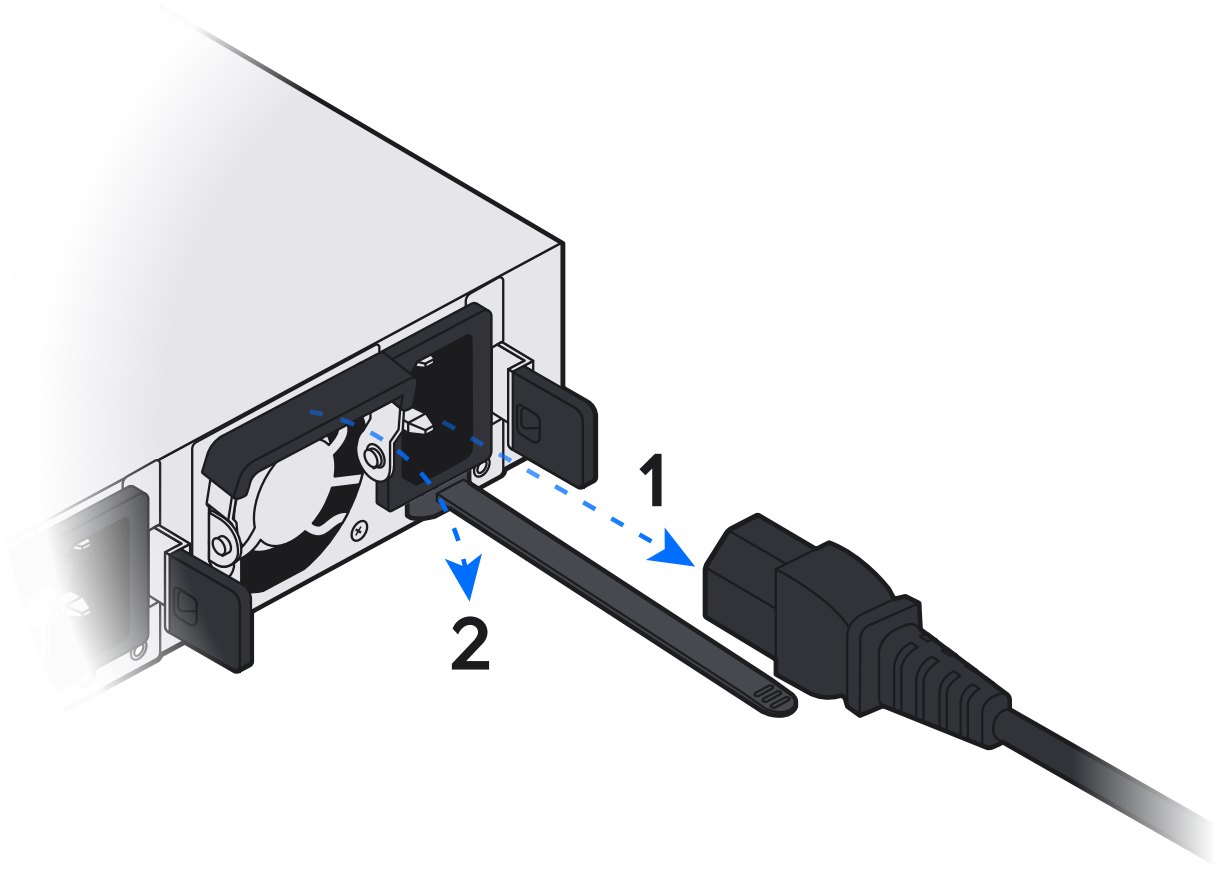

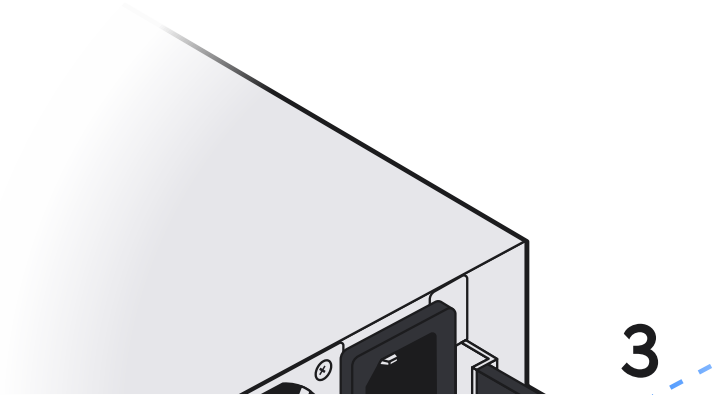

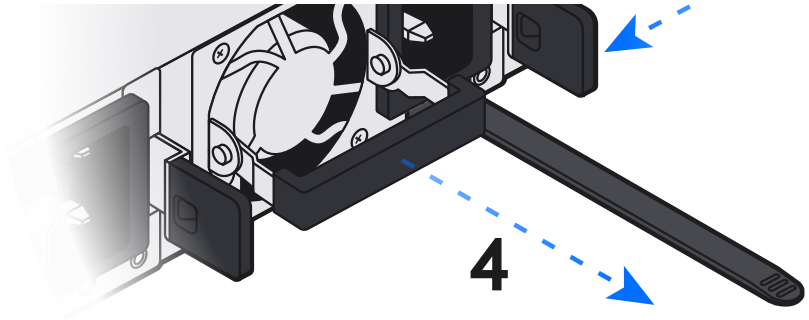

If you need further assistance, visit our Help Center or contact Ubiquiti Support.