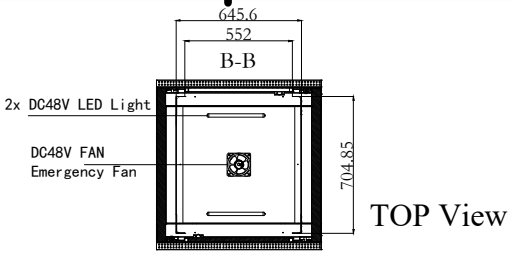

TOP View

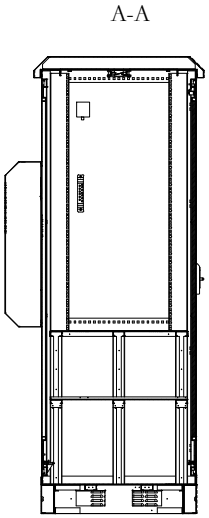

SIDE View

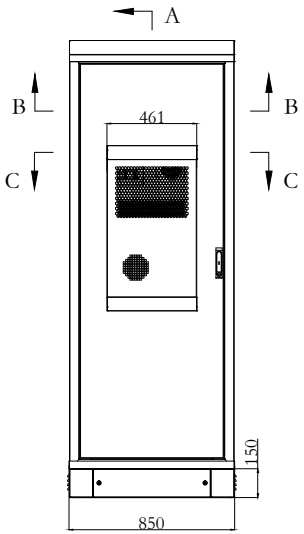

Front View

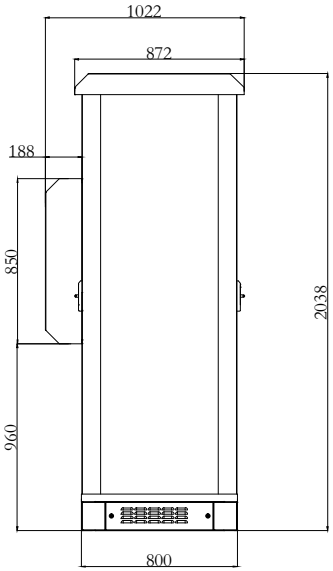

SIDE View

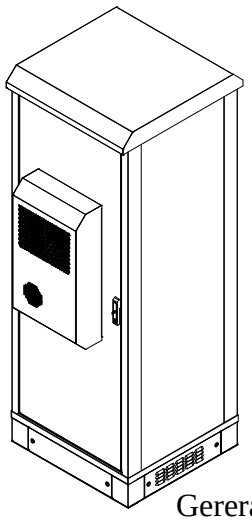

Gereral View

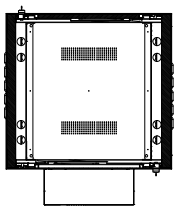

C-C Shelf View

Description

20RU 850mm Wide x 800mm Deep (internal size, not include the a/c and top roof shelter) OUTDOOR FREESTANDING Integrated Cabinet | Grey, IP55

* Lockable Front Door, 4 Vertical Rails (19" & 23" rack mounted Type)
* AC110V 60Hz,1000W Air Conditioner on the front door (x 1),rear door (x1)
* 20U equipment storage space, 2 section of battery space(326mm/12.835inch per space)
* 1*48V DC Fans on the TOP Roof for emergency using

Optional Accessories:

* Door Alarm sensor (x 2); DC48V LED LIGHT (x 2);
* Load Capacity 500KG
* Includes 150mm High Plinth
* Includes 30 x Cage Nut Sets

NOTES:

1. INSTALLATION SHALL COMPLY WITH ALL APPLICABLE NATIONAL, STATE AND LOCAL ELECTRICAL REGULATIONS.
2. REFER TO PRODUCT DOCUMENTATION FOR ADDITIONAL DETAILS PRIOR TO INSTALLATION AND SITE PREPARATION WORK.
3. ALL DIMENSIONS ARE IN MILLIMETERS [MM].

THIS DRAWING AND SPECIFICATIONS HEREIN ARE THE PROPERTY OF LightSaber AND SHALL NOT BE COPIED, REPRODUCED OR USED IN WHOLE OR IN PART, AS THE BASIS FOR THE MANUFACTURE OR SALE OF ITEMS WITHOUT WRITTEN PERMISSION FROM LightSaber. THIS DRAWING IS BASED UPON LATEST AVAILABLE INFORMATION AND IS SUBJECT TO CHANGE WITHOUT NOTICE.

LightSaber Optics

TITLE: IP55 Outdoor Cabinet AC110V,60Hz,1500W Air Conditioner	DWG NO:	LSO-20UOD-850800-AC1000W	REV. R0
	DRAWN BY:	Kai.Z	2021-06-25
	ENGINEER:	Pin.W	2021-06-25
PROJECT:	SHEET 1 OF 1	APPROVED BY: Tony.C	2021-06-25

A4

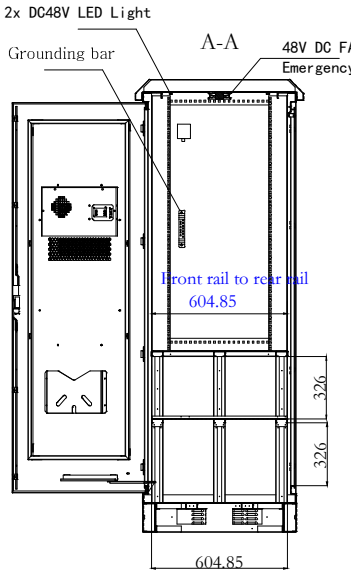

Side View

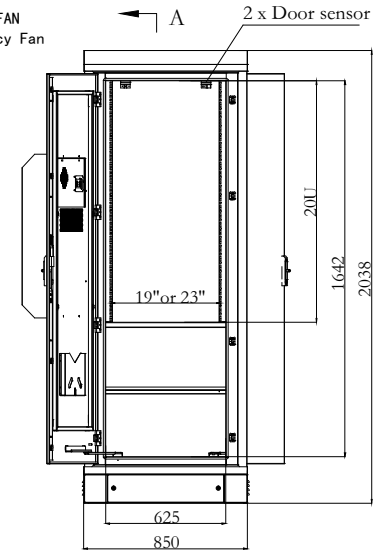

Front View

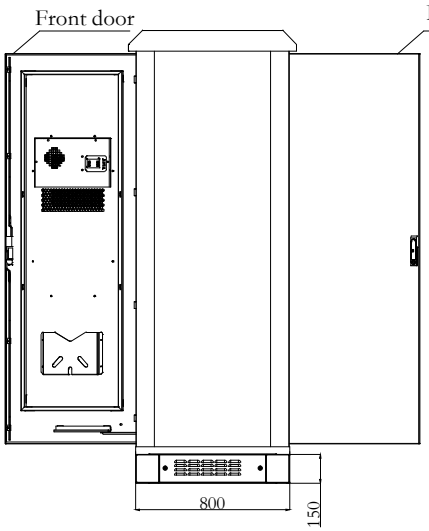

SIDE View

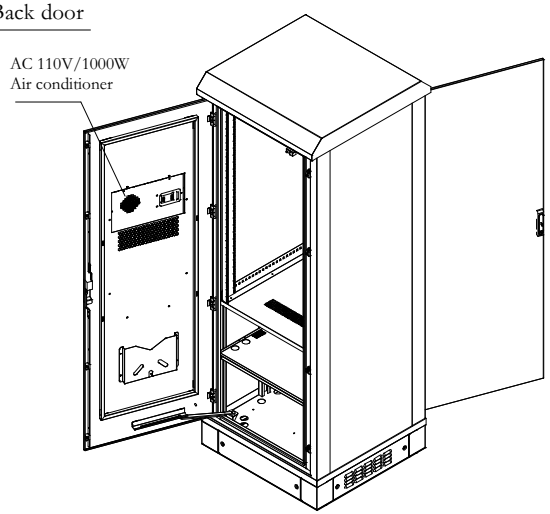

Gereral View

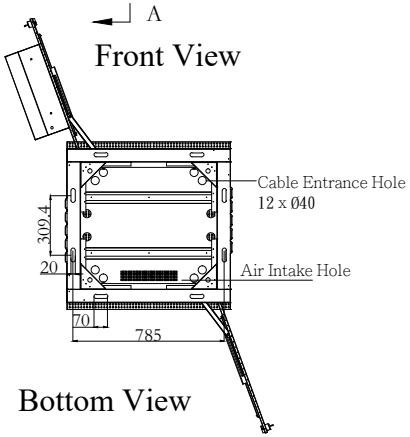

Bottom View

NOTES:

1. INSTALLATION SHALL COMPLY WITH ALL APPLICABLE NATIONAL, STATE AND LOCAL ELECTRICAL REGULATIONS.
2. REFER TO PRODUCT DOCUMENTATION FOR ADDITIONAL DETAILS PRIOR TO INSTALLATION AND SITE PREPARATION WORK.
3. ALL DIMENSIONS ARE IN MILLIMETERS [MM].

THIS DRAWING AND SPECIFICATIONS HEREIN ARE THE PROPERTY OF LightSaber AND SHALL NOT BE COPIED, REPRODUCED OR USED IN WHOLE OR IN PART, AS THE BASIS FOR THE MANUFACTURE OR SALE OF ITEMS WITHOUT WRITTEN PERMISSION FROM LightSaber. THIS DRAWING IS BASED UPON LATEST AVAILABLE INFORMATION AND IS SUBJECT TO CHANGE WITHOUT NOTICE.

LightSaber Optics

TITLE: IP55 Outdoor Cabinet AC110V,60Hz,1000W Air Conditioner	DWG NO:	LSO-20UOD-850800-AC1000W	REV. R0
	DRAWN BY:	Kai.Z	2021-06-25
	ENGINEER:	Pin.W	2021-06-25
PROJECT:	SHEET 1 OF 1	APPROVED BY: Tony.C	2021-06-25

A4

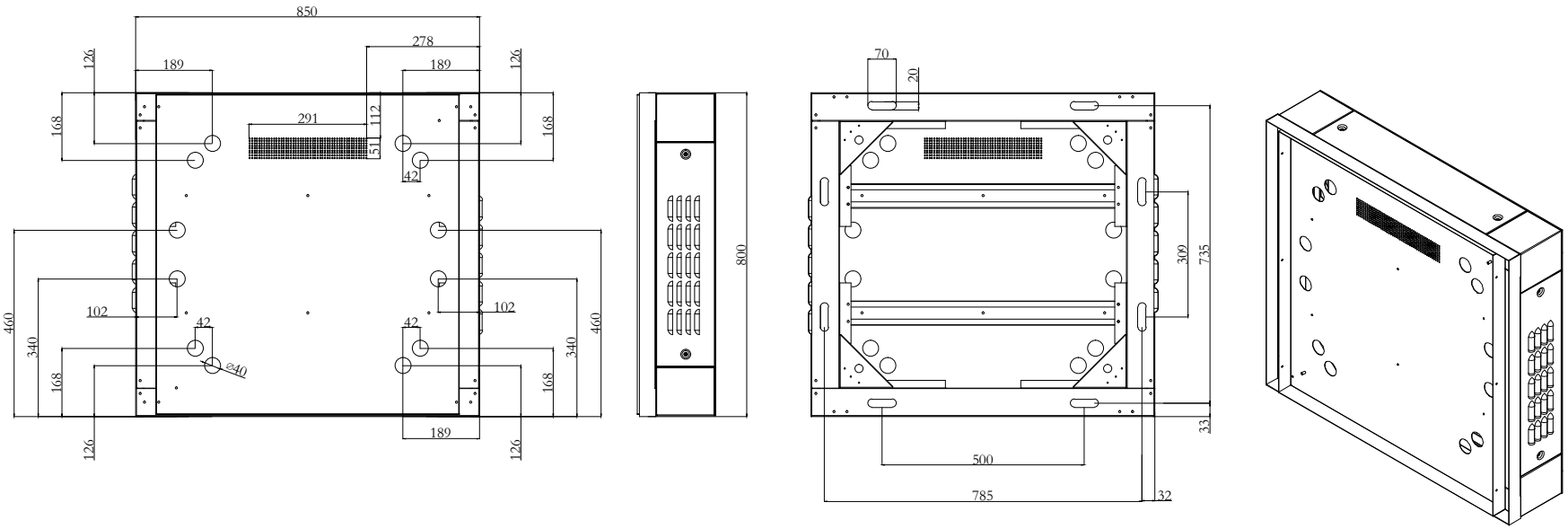

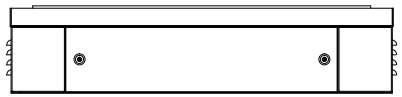

Bottom Plinth Mounting Dimension

NOTES:
1. INSTALLATION SHALL COMPLY WITH ALL APPLICABLE NATIONAL, STATE AND LOCAL ELECTRICAL REGULATIONS.
2. REFER TO PRODUCT DOCUMENTATION FOR ADDITIONAL DETAILS PRIOR TO INSTALLATION AND SITE PREPARATION WORK.
3. ALL DIMENSIONS ARE IN MILLIMETERS [MM].

THIS DRAWING AND SPECIFICATIONS HEREIN ARE THE PROPERTY OF LightSaber AND SHALL NOT BE COPIED, REPRODUCED OR USED IN WHOLE OR IN PART, AS THE BASIS FOR THE MANUFACTURE OR SALE OF ITEMS WITHOUT WRITTEN PERMISSION FROM LightSaber. THIS DRAWING IS BASED UPON LATEST AVAILABLE INFORMATION AND IS SUBJECT TO CHANGE WITHOUT NOTICE.

LightSaber Optics

TITLE: IP55 Outdoor Cabinet AC110V,60Hz,1000W Air Conditioner	DWG NO:	LSO-20UOD-850800-AC1000W	REV. R0
	DRAWN BY:	Kai.Z	2021-06-25
	ENGINEER:	Pin.W	2021-06-25
PROJECT:	SHEET 1 OF 1	APPROVED BY: Tony.C	2021-06-25

A4